Open in Colab

Prelab 7.1 Database & Visualization 2 - Grafana dashboard

Learning Goals

Students will be able to:

1. Identify the core components and features of the Grafana Dashboard
2. Analyze SQL statements and data formats
3. Write Python and SQL script to solve data manipulation functions

1.1 Introduction

In this lab, we will use a web visualization application, Grafana. Grafana is an open-source interactive visualization web dashboard application. Grafana provides various visualization functionalities, such as charts, tables, time series graphs, statistics, and alerts for the web according to the supported data sources. As data sources, Grafana supports both SQL and NoSQL. Grafana allows you to query, visualize, alert on, and understand your metrics no matter where you are stored. It enables to create, explore, and share dashboards. Major features of Grafana are as follows[1].

- Visualization
  - Fast and flexible client-side graphs with a multitude of options. Panel plugins offer many ways to visualize metrics and logs
- Dynamic Dashboards
  - Create dynamic & reusable dashboards with template variables that appear as dropdown at the top of the dashboard.
- Explore Metrics
  - Explore your data through ad-hoc queries and dynamic drilldown. Split view and compare different time ranges, queries and data sources side by side.
- Explore Logs
  - Experience the magic of switching from metrics to logs with preserved label filters. Quickly search through all your logs or streaming them live.
- Alerting
  - Visually define alert rules for your most important metrics. Grafana will continuously evaluate and send notifications to systems like Slack, PagerDuty, VictorOps, OpsGenie.
- Mixed Data Sources
  - Mix different data sources in the same graph! You can specify a data source on a per-query basis. This works for even custom data sources.

Figure 1 Example of web dashboard using Grafana for CNC machine and MTConnect

- Grafana official website: https://grafana.com/
- Grafana Live Demo: https://play.grafana.org/d/000000012/grafana-play-home?orgId=1 (available on Feb. 7, 2023)

---

[1]Grafana GitHub: https://github.com/grafana/grafana

1.2 Preparation for Visualization

In Lab7, we will visualize the stored data in MySQL database using Grafana so that you see graphs and charts in the web browser. In addition, we will create the entire data collection and visualization data stream from the sensor, edge computer, MTConnect, and database eventually to Grafana web dashboard as shown in Figure 2. This system allows us of enabling remote web-based and real-time monitoring as an application of IIoT implementation.

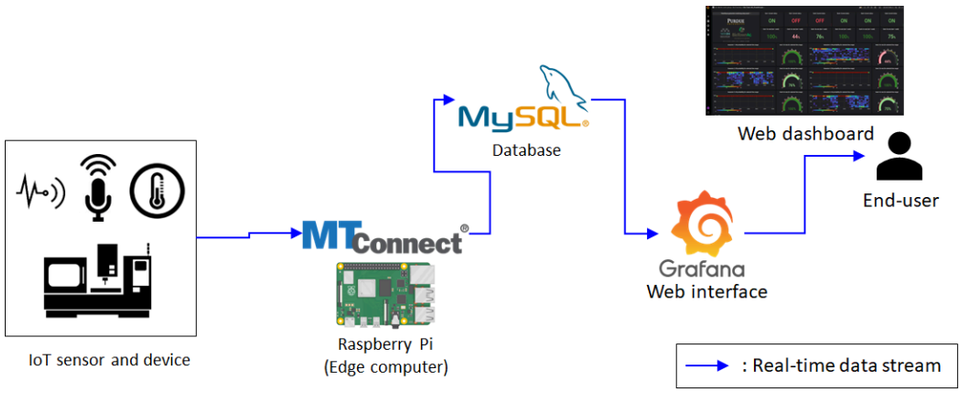

Figure 2 Schematic of remote real-time monitoring

To visualize data from MySQL to Grafana, you need to be familiar with SQL datatype and queries, especially "SELECT" statement. As a practice, perform Task 1.1.

Table 1 Example of MySQL table

id	timestamp	sensor	measurement	value
		...		
5	2022-03-07 01:15:26	ADXL345	Xacc	0.049828
6	2022-03-07 01:15:26	ADXL345	Yacc	-0.00012
7	2022-03-07 01:15:26	ADXL345	Zacc	10.05482
8	2022-03-07 01:15:27	power_meter	true_power	197.2017
9	2022-03-07 01:15:27	DS18B20	Temp	23
10	2022-03-07 01:15:27	Virtual	Humd	48
11	2022-03-07 01:15:28	ADXL345	Xacc	-0.10091
12	2022-03-07 01:15:28	ADXL345	Yacc	0.01897
13	2022-03-07 01:15:28	ADXL345	Zacc	9.98045
14	2022-03-07 01:15:29	power_meter	true_power	199.7116
15	2022-03-07 01:15:29	DS18B20	Temp	25
16	2022-03-07 01:15:29	Virtual	Humd	50
17	2022-03-07 01:15:28	ADXL345	Xacc	-0.04791
18	2022-03-07 01:15:28	ADXL345	Yacc	-0.00784
19	2022-03-07 01:15:28	ADXL345	Zacc	9.890663
		...		

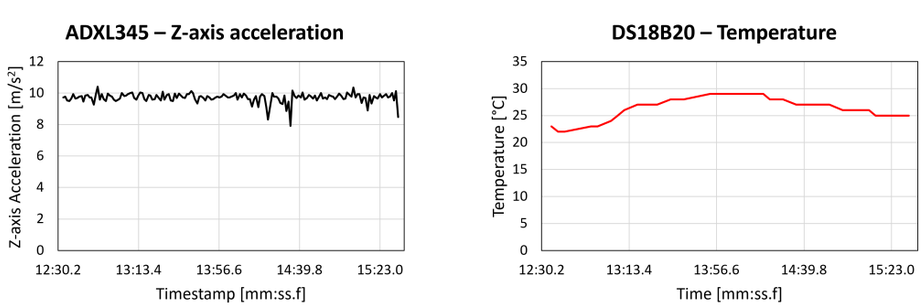

Figure 3 Example of data: Z-axis acceleration (left) and Temperature (right)

Task 1.1 SELECT Query Questions

1) What are SELECT statements to plot two time-series graphs to obtain Figure 3 if your database table looks like Table 1? Write down two entire SELECT statements.

- Assume that your table name is 'ME597Spring26.yourname'.
- Write down each full SELECT statement, e.g., SELECT SOMETHING

T1_Statement1

```
SELECT timestamp, value FROM ME597Spring26.aaryafarheen_lab6 WHERE sei
```

T1_Statement2

```
-- T1_Statement2: Humidity time-series SELECT timestamp, value FROM ME597
```

Show code

2) What are the result grids of each SELECT statement from the example table?

- For example, column 1 is A and column 2 is B.

T1_1

2026-03-09 13:10:42.0	-0.2745862	2026-03-09 13:10:45.0	-0.3530394 20

T1_2

2026-03-09 13:10:42.0	50.11429312655916	2026-03-09 13:10:45.0	32.682

Show code

```
2026-03-09 13:10:42.0   -0.2745862 2026-03-09 13:10:45.0        -0.3530394 2026-03-09 13:10:49.0        -0.3530394 2026-03-09 13:10:53.0
```

Task 1.2 TIMESTAMP of MySQL

1) What is the format of 'TIMESTAMP' datatype of MySQL?

T2_1

YYYY-MM-DD HH:MM:SS

Show code

Task 1.3 MTConnect timestamp

An example of MTConnect timestamp is "2026-02-25T04:34:33.605220Z". Write down a Python script for which you want to convert the timestamp string of MTConnect to MySQL TIMESTAMP format. Attach your script to the report.

- Both MTConnect timestamp and MySQL TIMESTAMP data types of Python are string.
- Convert the MTConnect timestamp string given in this task to the timestamp string as MySQL TIMESTAMP format.
- If needed, you need to convert the time zone.

(*Hint : Access to MySQL Database to check an actual value of the MySQL TIMESTAMP and compare it with the MTConnect timestamp - refer to Lab6.)

```
# Insert your script here:
#

# Python script to convert MTConnect timestamp to MySQL TIMESTAMP format

from datetime import datetime

# Example MTConnect timestamp
mtconnect_timestamp = "2026-02-25T04:34:33.605220Z"

# Step 1: Remove the 'Z' (if present) which indicates UTC
mtconnect_timestamp = mtconnect_timestamp.rstrip('Z')

# Step 2: Parse the MTConnect timestamp string to a datetime object
# Note: MTConnect timestamp includes microseconds
dt = datetime.strptime(mtconnect_timestamp, "%Y-%m-%dT%H:%M:%S.%f")

# Step 3: If needed, convert from UTC to local time
# (optional, comment out if not needed)
# import pytz
# dt = dt.replace(tzinfo=pytz.UTC).astimezone(pytz.timezone("Your/Timezone"))

# Step 4: Format datetime object to MySQL TIMESTAMP string (no microseconds)
mysql_timestamp = dt.strftime("%Y-%m-%d %H:%M:%S")

# Step 5: Print the result
print("MTConnect timestamp:", mtconnect_timestamp)
print("MySQL TIMESTAMP format:", mysql_timestamp)

#
```

Further Instruction

Grafana provides an extensive (1-hour) webinar about the Grafana dashboard. Please watch the video so that you understand what Grafana is and how it works.

```
from IPython.display import YouTubeVideo
YouTubeVideo('0n2UNzk2OaI')
#Watch this video.
```

Show hidden output

Get back to Lab Index Page